US009180951B2

(12) **United States Patent**
Hitachi et al.

(10) **Patent No.: US 9,180,951 B2**
(45) **Date of Patent: Nov. 10, 2015**

(54) **SHIP MANEUVERING DEVICE**

(75) Inventors: **Junichi Hitachi**, Osaka (JP); **Naohiro Hara**, Osaka (JP)

(73) Assignee: **Yanmar Co., Ltd.**, Osaka (JP)

(*) Notice: Subject to any disclaimer, the term of this patent is extended or adjusted under 35 U.S.C. 154(b) by 33 days.

(21) Appl. No.: **14/129,823**

(22) PCT Filed: **Mar. 29, 2012**

(86) PCT No.: **PCT/JP2012/058456**
§ 371 (c)(1),
(2), (4) Date: **Feb. 4, 2014**

(87) PCT Pub. No.: **WO2013/001876**
PCT Pub. Date: **Jan. 3, 2013**

(65) **Prior Publication Data**

US 2014/0174331 A1 Jun. 26, 2014

(30) **Foreign Application Priority Data**

Jun. 30, 2011 (JP) 2011-146743

(51) **Int. Cl.**
B63H 21/22 (2006.01)
B63H 25/42 (2006.01)
(Continued)

(52) **U.S. Cl.**
CPC ***B63H 25/42*** (2013.01); ***B63H 21/213*** (2013.01); ***B63H 21/265*** (2013.01)

(58) **Field of Classification Search**
USPC 440/1, 80
IPC B63H 5/07,2021/216
See application file for complete search history.

(56) **References Cited**

U.S. PATENT DOCUMENTS

6,848,382 B1 2/2005 Bekker
7,677,937 B2 * 3/2010 Ishida et al. 440/1
(Continued)

FOREIGN PATENT DOCUMENTS

EP 1 775 212 A1 4/2007
EP 2 210 810 A2 7/2010
(Continued)

OTHER PUBLICATIONS

Extended European Search Report for European Patent Application No. EP12804380.9, dated Apr. 21, 2015, 6 pages.

Primary Examiner — Stephen Avila
(74) *Attorney, Agent, or Firm* — Sterne, Kessler, Goldstein & Fox P.L.L.C.

(57) **ABSTRACT**

Provided is a ship maneuvering device that can increase operation sensitivity and enables smooth operation when simultaneously operating the rotation component determination unit and the oblique sailing component determination unit of an operation means. In the ship maneuvering device **1**, a control device **31** computes a rotation component propulsion vector Trot for rotation and an oblique sailing component propulsion vector T_{trans} for oblique sailing for left and right out-drive units **10**A, **10**B from the amount of operation of a joystick **21**, calculates the combined torque T by combining the rotation component propulsion vector T_{rot} and the oblique sailing component propulsion vector T_{trans} for each of the left and right out-drive units **10**A, **10**B, and computes the propulsion and orientation for each of the left and right out-drive units **10**A, **10**B.

4 Claims, 11 Drawing Sheets

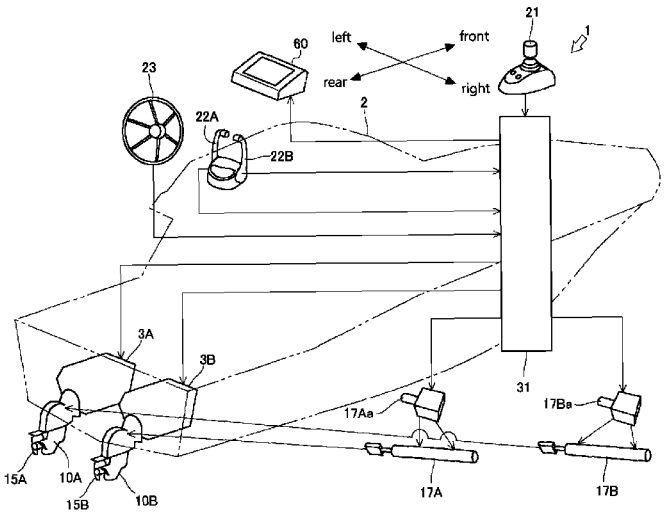

(51) **Int. Cl.**
B63H 21/21 (2006.01)
B63H 20/00 (2006.01)

(56) **References Cited**

U.S. PATENT DOCUMENTS

8,170,734	B2 *	5/2012	Kaji	701/21
2007/0017426	A1 *	1/2007	Kaji et al.	114/144 RE
2007/0082566	A1	4/2007	Okuyama	
2009/0197486	A1	8/2009	Szilagyi et al.	
2010/0138083	A1	6/2010	Kaji	

FOREIGN PATENT DOCUMENTS

JP	H01-285486	A	11/1989
JP	2010-126085	A	6/2010

* cited by examiner

Fig. 1

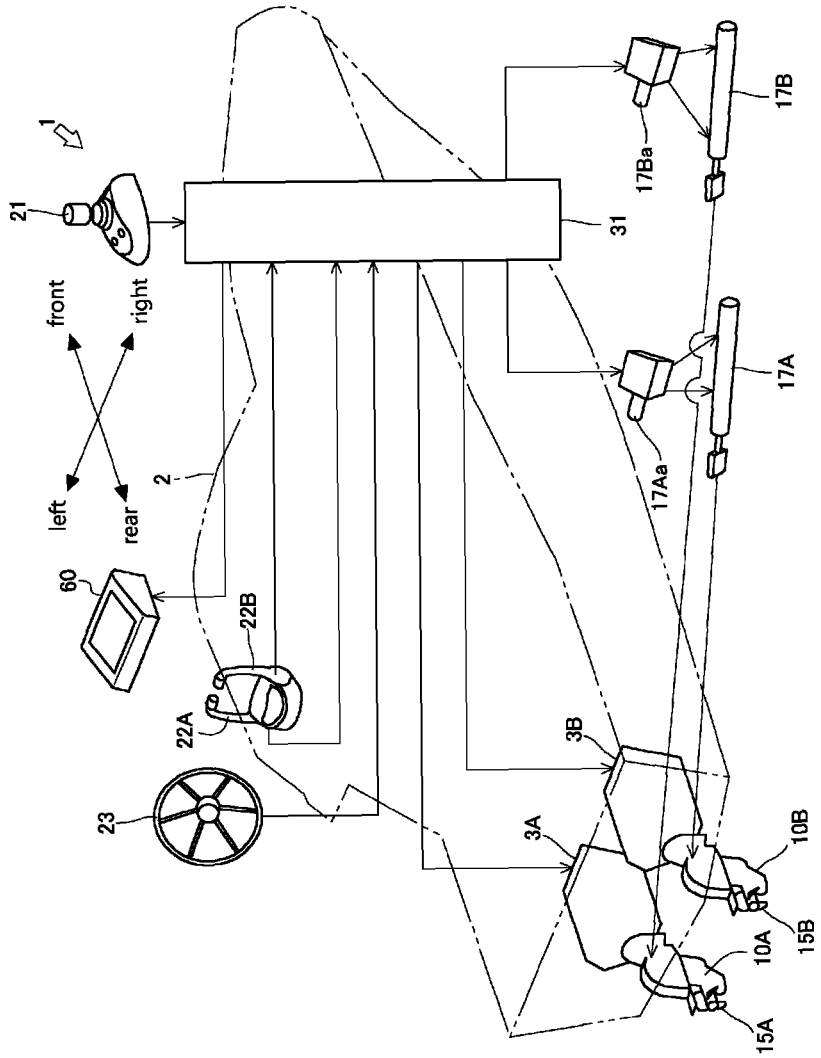
1
21
31
17B
17Ba
17A
17Aa
front
right
left
rear
2
60
22B
22A
23
3B
3A
10B
15B
10A
15A

Fig. 2

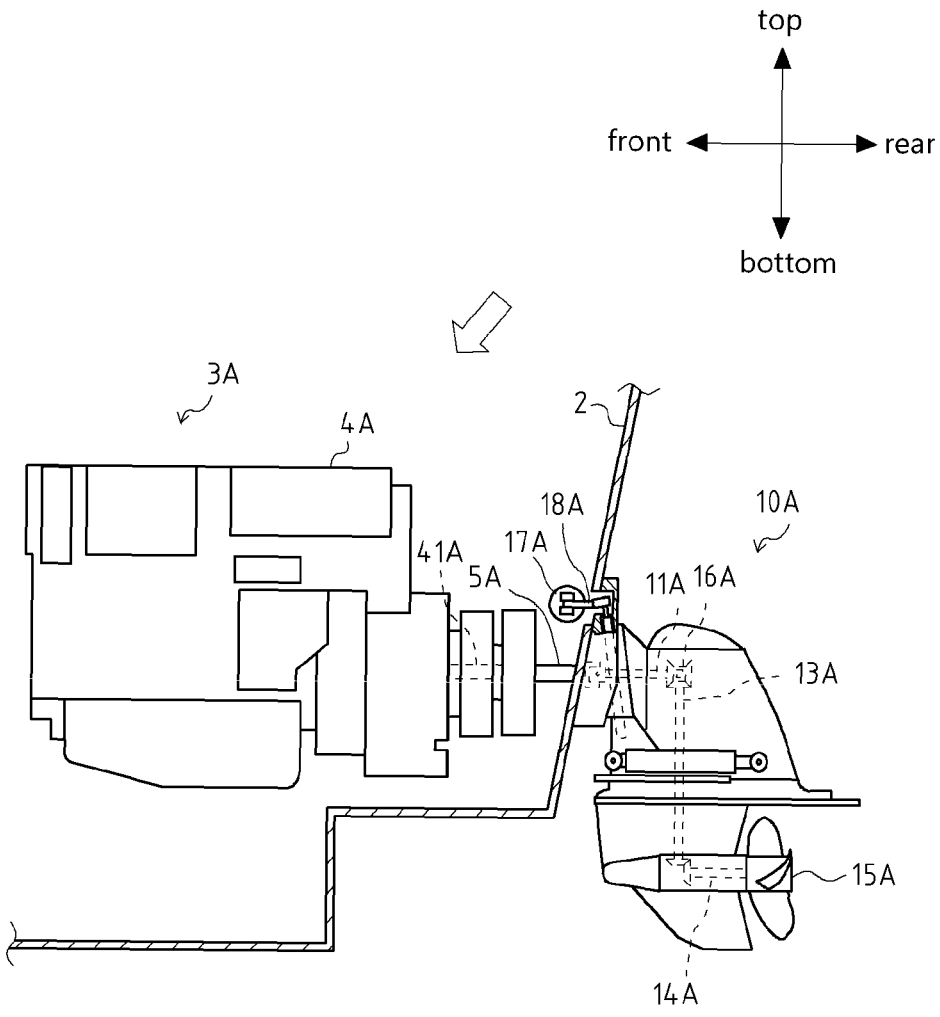
top
front
rear
bottom
3A
4A
2
18A
10A
17A
41A
5A
11A
16A
13A
15A
14A

Fig. 3

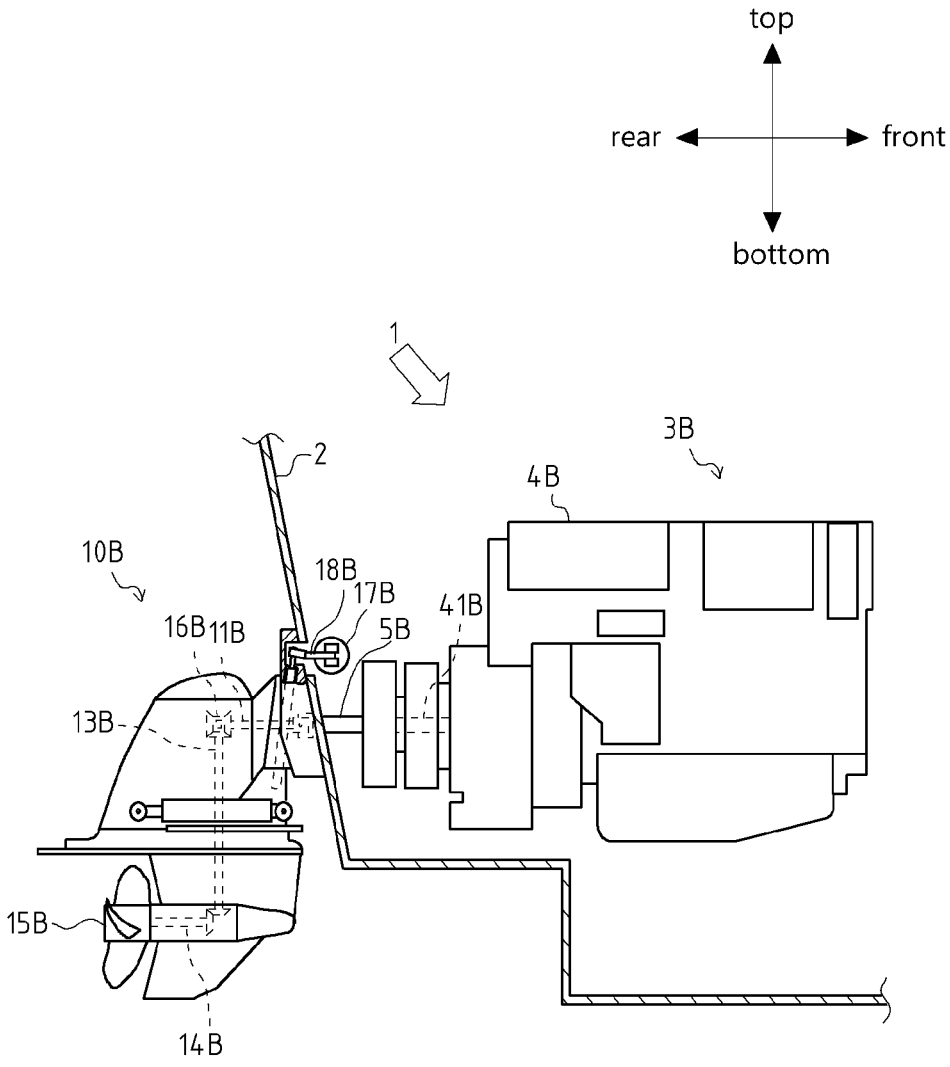
top
rear
front
bottom
1
2
3B
4B
10B
18B
17B
16B
11B
5B
41B
13B
15B
14B

Fig. 4

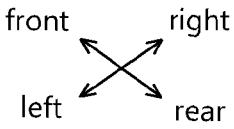

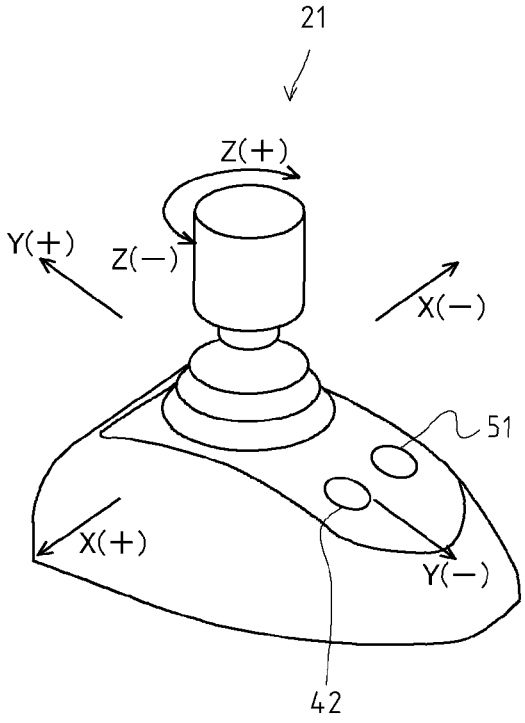

Fig.5

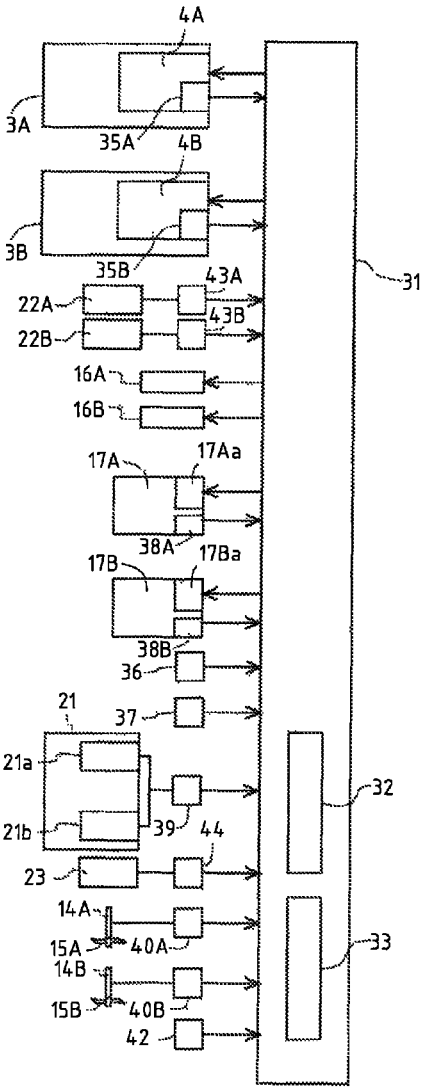
4A
3A
35A
4B
3B
35B
43A
43B
22A
22B
16A
16B
17A
17Aa
38A
17B
17Ba
38B
36
21
37
21a
21b
39
44
23
14A
15A
40A
14B
15B
40B
42
31
32
33

Fig. 6

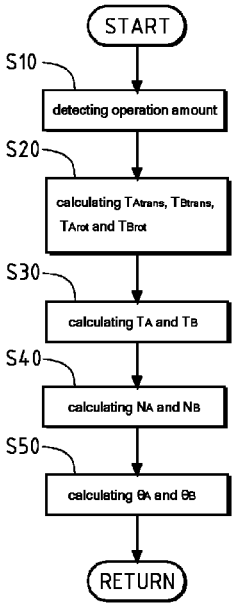
START
S10
detecting operation amount
S20
calculating T_{Atrans}, T_{Btrans}, T_{Arot} and T_{Brot}
S30
calculating T_A and T_B
S40
calculating N_A and N_B
S50
calculating θ_A and θ_B
RETURN

Fig. 7

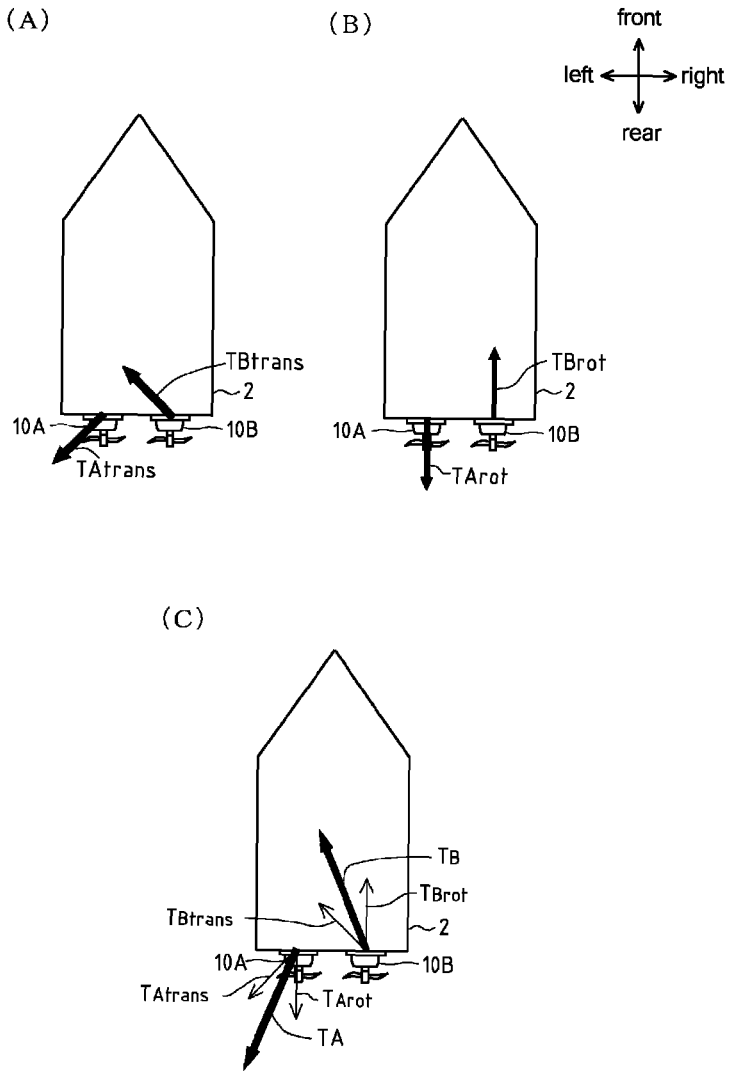
(A)
TBtrans
2
10A
10B
TAtrans
(B)
front
left
right
rear
TBrot
2
10A
10B
TArot
(C)
TB
TBrot
TBtrans
2
10A
10B
TAtrans
TArot
TA

Fig. 8

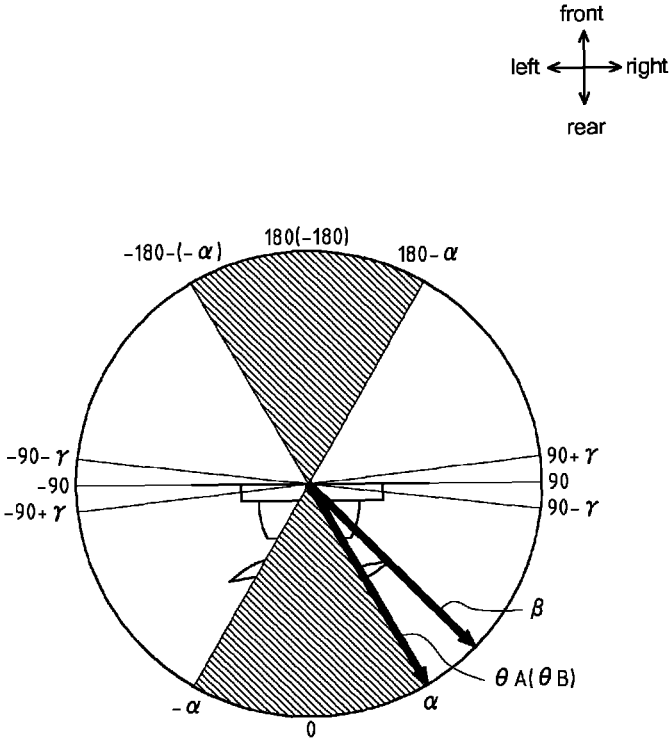
front
left
right
rear
180(-180)
-180-(-α)
180-α
-90-γ
-90
-90+γ
90+γ
90
90-γ
β
θA(θB)
-α
α
0

Fig. 9

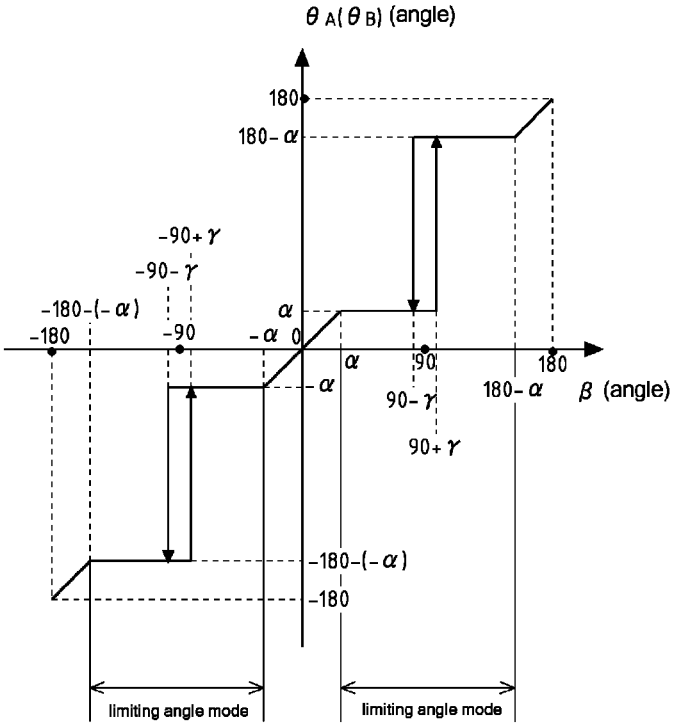
θ A(θ B) (angle)
180
180- α
-90+ γ
-90- γ
-180-(- α)
-180
-90
- α
0
α
α
90
180
- α
90- γ
180- α
β (angle)
90+ γ
-180-(- α)
-180
limiting angle mode
limiting angle mode

Fig. 10

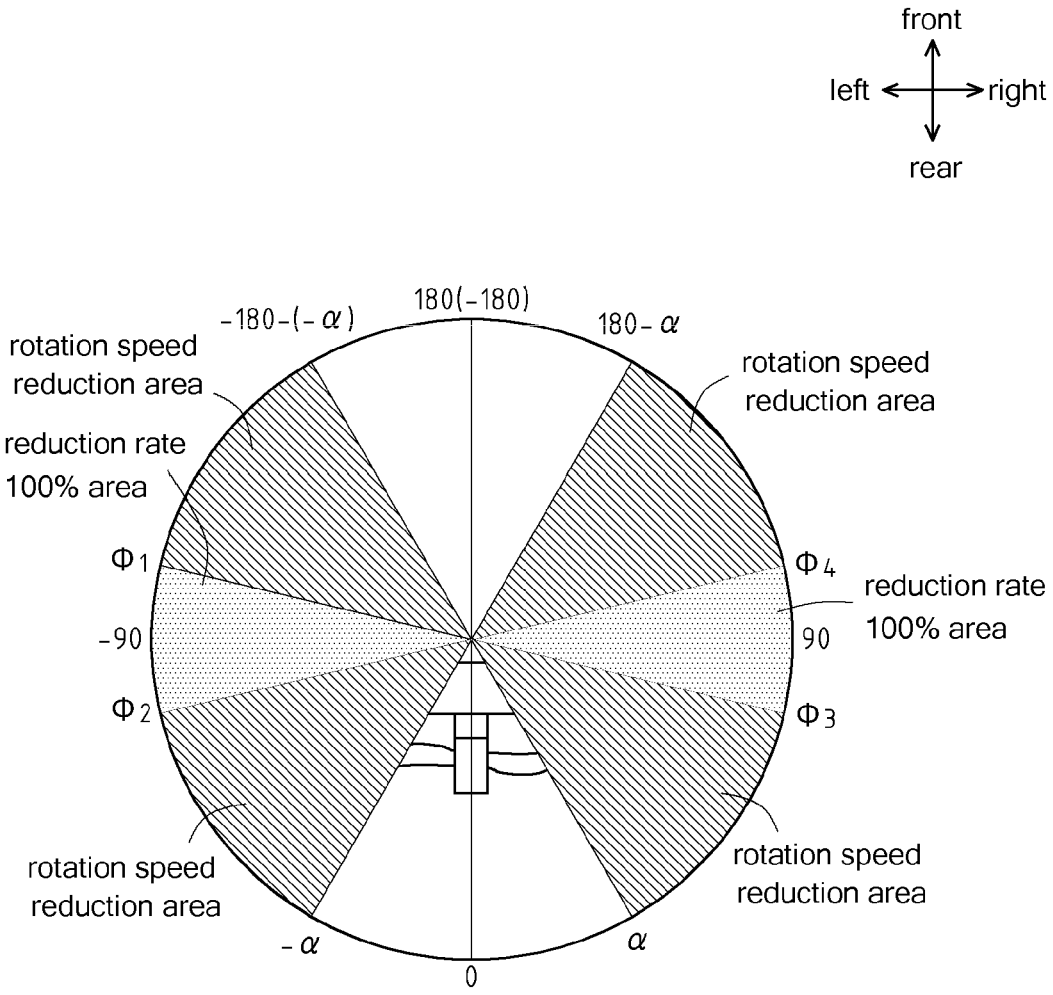
front
left
right
rear
180(-180)
-180-(-α)
180-α
rotation speed reduction area
rotation speed reduction area
reduction rate 100% area
Φ1
Φ4
reduction rate 100% area
-90
90
Φ2
Φ3
rotation speed reduction area
rotation speed reduction area
-α
α
0

Fig. 11

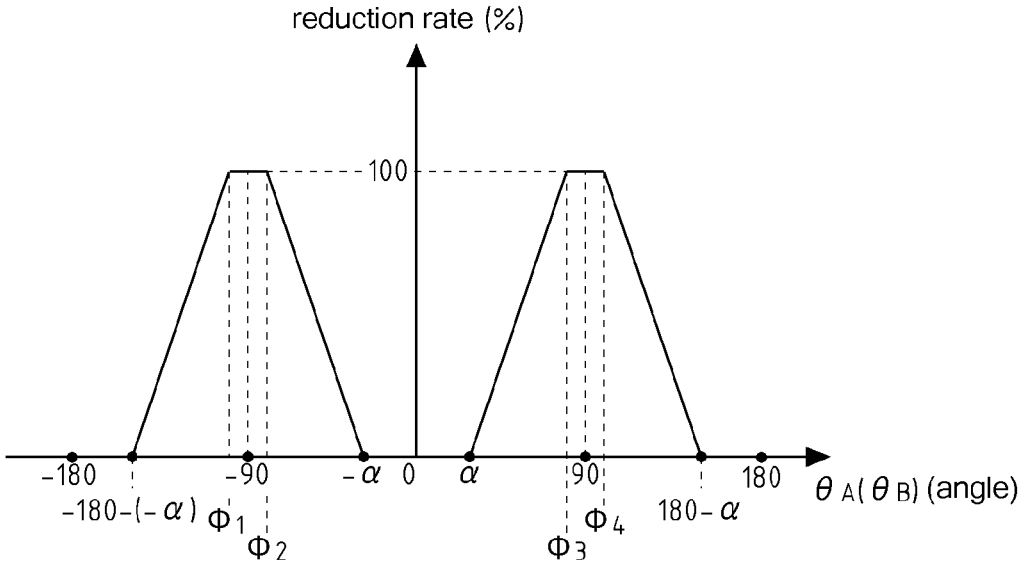
reduction rate (%)
100
-180
-180-(-α)
-90
Φ1
Φ2
-α
0
α
90
Φ3
Φ4
180-α
180
θA(θB) (angle)

SHIP MANEUVERING DEVICE

TECHNICAL FIELD

The present invention relates to an art of a ship maneuvering device.

BACKGROUND ART

Conventionally, a ship is known having an inboard motor (inboard engine, outboard drive) in which a pair of left and right engines are arranged inside a hull and power is transmitted to a pair of left and right outdrive devices arranged outside the hull. The outdrive devices are propulsion devices rotating screw propellers so as to propel the hull, and are rudder devices rotated concerning a traveling direction of the hull so as to make the hull turn.

Such outdrive devices are rotated with hydraulic steering actuators provided in the outdrive devices (for example, see the Patent Literature 1). Then, a rotation angle of each of the outdrive devices, that is, a steering angle is grasped based on detection results of an angle detection sensor and the like provided in a linkage mechanism constituting the outdrive device.

The ship has an operation means setting a traveling direction of the ship. The ship is controlled with a control device so as to travel to the direction set with the operation means.

PRIOR ART REFERENCE

Patent Literature

Patent Literature 1: the Japanese Patent Laid Open Gazette Hei. 1-285486

DISCLOSURE OF INVENTION

Problems to be Solved by the Invention

The operation means has an oblique sailing component determination unit and a turning component determination unit. Conventionally, when the oblique sailing component determination unit and the turning component determination unit are operated simultaneously, priority is not set and action of the hull is unnatural, whereby smooth maneuvering cannot be performed.

In consideration of the above problems, the purpose of the present invention is to provide a ship maneuvering device that can increase operation sensitivity and enables smooth operation when simultaneously operating the oblique sailing component determination unit and the turning component determination unit of an operation means.

Means for Solving the Problems

The problems to be solved by the present invention have been described above, and subsequently, the means of solving the problems will be described below.

According to the present invention, a ship maneuvering device includes a pair of left and right engines, rotation speed changing actuators independently changing engine rotation speeds of the pair of left and right engines, a pair of left and right outdrive devices respectively connected to the pair of left and right engines and rotating screw propellers so as to propel a hull, forward/reverse switching clutches disposed between the engines and the screw propellers, a pair of left and right steering actuators respectively independently rotating the pair of left and right outdrive devices laterally within a predetermined angle range, an operation means setting a traveling direction of a ship, an operation amount detection means detecting the operation amount of the operation means, and a control device controlling the rotation speed changing actuators, the forward/reverse switching clutches, and the steering actuators so as to travel to a direction set by the operation means. The control device calculates oblique sailing component propulsion power vectors for oblique sailing of the left and right outdrive devices and turning component propulsion power vectors for the turning from the operation amount of the operation means, and composes the oblique sailing component propulsion power vectors and the turning component propulsion power vectors of the left and right outdrive devices so as to calculates composition vectors, thereby calculating propulsion powers and directions of the left and right outdrive devices.

According to the present invention, when directions of the composition vector is within a range over a predetermined angle range of the outdrive device, the outdrive device is controlled so as to be made a predetermined limiting angle mode and the engine rotation speed is reduced to a set rotation speed.

According to the present invention, when the direction of the composition vector is within a range over a predetermined angle range of the outdrive device, a rotation angle of the outdrive device is fixed at a state of a predetermined limiting angle.

According to the present invention, when a direction of the composition vector is within a range over a predetermined angle range of the outdrive device, the engine rotation speed of the engine is reduced following reduction of a minor angle between the direction of the composition vector and a lateral direction of the hull.

Effect of the Invention

The present invention brings the following effects.

According to the present invention, in comparison with the case of calculating the propulsion powers and the directions of the left and right outdrive devices based on only the oblique sailing component propulsion power vectors and subsequently calculating the propulsion powers and the directions of the left and right outdrive devices based on only the turning component propulsion power vectors, by calculating the composition vectors based on the oblique sailing component propulsion power vectors and the turning component propulsion power vectors, smooth operation is obtained and operability is improved. Since the oblique sailing component propulsion power and the turning component propulsion power can be controlled independently, the components do not interfere with each other, whereby a turning moment generated at the time of the turning operation has always the same characteristics regardless of the input of the oblique sailing operation. Accordingly, in the ship having this control, accuracy of correction of the turning direction is improved.

According to the present invention, even if the direction of the composition vector is over the predetermined angle range of the outdrive device, the steering of the outdrive device can be corrected.

According to the present invention, when the direction of the composition vector is over the predetermined angle range of the outdrive devices, frequent change of the rotation angle and frequent switching of forward/reverse rotation of the outdrive device is prevented.

According to the present invention, when the direction of the composition vector is over the predetermined angle range

of the outdrive devices, the switching of forward/reverse rotation of the outdrive devices can be performed smoothly.

BRIEF DESCRIPTION OF DRAWINGS

[FIG. **1**] FIG. **1** is a drawing of a ship according to an embodiment of the present invention.

[FIG. **2**] FIG. **2** is a left side view partially in section of an outdrive device according to the embodiment of the present invention.

[FIG. **3**] FIG. **3** is a right side view partially in section of the outdrive device according to the embodiment of the present invention.

[FIG. **4**] FIG. **4** is a drawing of an operation device.

[FIG. **5**] FIG. **5** is a block diagram of a control device.

[FIG. **6**] FIG. **6** is a flow chart of a calculation method of propulsion powers and directions of left and right outdrive devices.

[FIG. **7**] FIG. **7**(A) is a drawing of oblique sailing component propulsion power vectors of the outdrive devices. FIG. **7**(B) is a drawing of turning component propulsion power vectors of the outdrive devices. FIG. **7**(C) is a drawing of composition vectors of the outdrive devices.

[FIG. **8**] FIG. **8** is a plan view of a rotation angle of the outdrive device.

[FIG. **9**] FIG. **9** is a graph of relation of the angle of the composition vector and the rotation angle of the outdrive device.

[FIG. **10**] FIG. **10** is a plan view of the rotation angle of the outdrive device.

[FIG. **11**] FIG. **11** is a graph of relation of the rotation angle of the outdrive device and a reduction rate of an engine rotation speed.

DESCRIPTION OF NOTATIONS

1 ship maneuvering device
2 hull
3A and **3**B engines
4A and **4**B rotation speed changing actuators
10A and **10**B outdrive devices
15A and **15**B screw propellers
16A and **16**B forward/reverse switching clutches
17A and **17**B hydraulic steering actuators
21 joystick (operation means)
31 control device
39 operation amount detection sensor (operation amount detection means)
T_{Atrans} and T_{Btrans} oblique sailing component propulsion power vectors
T_{Arot} and T_{Brot} turning component propulsion power vectors
T_A and T_B composition vectors
β angles of composition vectors
θ_A and θ_B rotation angles of outdrive devices

DETAILED DESCRIPTION OF THE INVENTION

Firstly, an explanation will be given on a ship maneuvering device according to an embodiment of the present invention.

As shown in FIGS. **1**, **2** and **3**, a ship maneuvering device **1** has a pair of left and right engines **3**A and **3**B, rotation speed changing actuators **4**A and **4**B independently changing engine rotation speeds N_A and N_B of the pair of left and right engines **3**A and **3**B, a pair of left and right outdrive devices **10**A and **10**B respectively connected to the pair of left and right engines **3**A and **3**B and rotating screw propellers **15**A and **15**B so as to propel a hull **2**, forward/reverse switching clutches **16**A and **16**B disposed between the engines **3**A and **3**B and the screw propellers **15**A and **15**B, a pair of left and right hydraulic steering actuators **17**A and **17**B respectively independently rotating the pair of left and right outdrive devices **10**A and **10**B laterally, electromagnetic valves **17**Aa and **17**Ba controlling hydraulic pressure in the hydraulic steering actuators **17**A and **17**B, a joystick **21**, accelerator levers **22**A and **22**B and an operation wheel **23** as operation means setting a traveling direction of the ship, an operation amount detection sensor **39** (see FIG. **5**) as an operation amount detection means detecting an operation amount of the joystick **21**, operation amount detection sensor **43**A and **43**B (see FIG. **5**) as operation amount detection means detecting operation amounts of the accelerator levers **22**A and **22**B, an operation amount detection sensor **44** (see FIG. **5**) as an operation amount detection means detecting an operation amount of the operation wheel **23**, and a control device **31** (see FIG. **5**) controlling the rotation speed changing actuators **4**A and **4**B, the forward/reverse switching clutches **16**A and **16**B, the hydraulic steering actuators **17**A and **17**B and the electromagnetic valves **17**Aa and **17**Ba so as to travel to a direction set by the joystick **21**, the accelerator levers **22**A and **22**B and the operation wheel **23**.

The engines **3**A and **3**B are arranged in a rear portion of the hull **2** as a pair laterally, and are connected to the outdrive devices **10**A and **10**B arranged outside the ship. The engines **3**A and **3**B have output shafts **41**A and **41**B for outputting rotation power.

The rotation speed changing actuators **4**A and **4**B are means controlling the engine rotation power, and changes a fuel injection amount of a fuel injection device and the like so as to control engine rotation speeds of the engines **3**A and **3**B.

The outdrive devices **10**A and **10**B are propulsion devices rotating the screw propellers **15**A and **15**B so as to propel the hull **2**, and are provided outside the rear portion of the hull **2** as a pair laterally. The pair of left and right outdrive devices **10**A and **10**B are respectively connected to the pair of left and right engines **3**A and **3**B. The outdrive devices **10**A and **10**B are rudder devices which are rotated concerning the traveling direction of the hull **2** so as to make the hull **2** turn. The outdrive devices **10**A and **10**B mainly include input shafts **11**A and **11**B, the forward/reverse switching clutches **16**A and **16**B, drive shafts **13**A and **13**B, final output shaft **14**A and **14**B, and the rotating screw propellers **15**A and **15**B.

The input shafts **11**A and **11**B transmit rotation power. In detail, the input shafts **11**A and **11**B transmit rotation power of the engines **3**A and **3**B, transmitted from the output shafts **41**A and **41**B of the engines **3**A and **3**B via universal joints **5**A and **5**B, to the forward/reverse switching clutches **16**A and **16**B. One of ends of each of the input shafts **11**A and **11**B is connected to corresponding one of the universal joints **5**A and **5**B attached to the output shafts **41**A and **41**B of the engines **3**A and **3**B, and the other end thereof is connected to corresponding one of the forward/reverse switching clutches **16**A and **16**B.

The forward/reverse switching clutches **16**A and **16**B are arranged between the engines **3**A and **3**B and the rotating screw propellers **15**A and **15**B, and switch rotation direction of the rotation power. In detail, the forward/reverse switching clutches **16**A and **16**B are rotation direction switching devices which switch the rotation power of the engines **3**A and **3**B, transmitted via the input shafts **11**A and **11**B and the like, to forward or reverse direction. The forward/reverse switching clutches **16**A and **16**B have forward bevel gears and reverse bevel gears which are connected to inner drums having disc plates, and pressure plates of outer drums con-

nected to the input shafts **11**A and **11**B is pressed against the disc plates of the forward bevel gears or the reverse bevel gears so as to switch the rotation direction.

The drive shafts **13**A and **13**B transmit the rotation power. In detail, the drive shafts **13**A and **13**B are rotation shafts which transmit the rotation power of the engines **3**A and **3**B, transmitted via the forward/reverse switching clutches **16**A and **16**B and the like, to the final output shaft **14**A and **14**B. A bevel gear provided at one of ends of each of the drive shafts **13**A and **13**B is meshed with the forward bevel gear and the reverse bevel gear provided on corresponding one of the forward/reverse switching clutches **16**A and **16**B, and a bevel gear provided at the other end is meshed with a bevel gear provided on corresponding one of the final output shaft **14**A and **14**B.

The final output shaft **14**A and **14**B transmit the rotation power. In detail, the final output shaft **14**A and **14**B are rotation shafts which transmit the rotation power of the engines **3**A and **3**B, transmitted via the drive shafts **13**A and **13**B and the like, to the screw propellers **15**A and **15**B. As mentioned above, the bevel gear provided at one of ends of each of the final output shaft **14**A and **14**B is meshed with the bevel gear of corresponding one of the drive shafts **13**A and **13**B, and the other end is attached thereto with corresponding one of the screw propellers **15**A and **15**B.

The screw propellers **15**A and **15**B are rotated so as to generate propulsion power. In detail, the screw propellers **15**A and **15**B are driven by the rotation power of the engines **3**A and **3**B transmitted via the final output shaft **14**A and **14**B and the like so that a plurality of blades arranged around the rotation shafts paddle surrounding water, whereby the propulsion power is generated.

The hydraulic steering actuators **17**A and **17**B are hydraulic devices which drive steering arms **18**A and **18**B so as to rotate the outdrive devices **10**A and **10**B. The hydraulic steering actuators **17**A and **17**B are provided therein with the electromagnetic valves **17**Aa and **17**Ba for controlling hydraulic pressure, and the electromagnetic valves **17**Aa and **17**Ba are connected to the control device **31**.

The hydraulic steering actuators **17**A and **17**B are so-called single rod type hydraulic actuators. However, the hydraulic steering actuators **17**A and **17**B may alternatively be double rod type.

The joystick **21** as the operation means is a device determining the traveling direction of the ship, and is provided near an operator's seat of the hull **2**. A plane operation surface of the joystick **21** is an oblique sailing component determination part **21***a*, and a torsion operation surface thereof is a turning component determination part **21***b*.

The joystick **21** can be moved free within the operation surface parallel to an X-Y plane shown in FIG. **4**, and a center of the operation surface is used as a neutral starting point. Longitudinal and lateral directions in the operation surface correspond to the traveling direction, and an inclination amount of the joystick **21** corresponds to a target hull speed. The target hull speed is increased corresponding to increase of the inclination amount of the joystick **21**.

The torsion operation surface is provided with the joystick **21**, and by twisting the joystick **21** concerning a Z axis extended substantially perpendicularly to the plane operation surface as a turning axis, a turning speed can be changed. A torsion amount of the joystick **21** corresponds to a target turning speed. A maximum target lateral turning speed is set at fixed turning angle positions of the joystick **21**.

The accelerator levers **22**A and **22**B as the operation means are devices determining the target hull speed of the ship, and are provided near the operator's seat of the hull **2**. The two accelerator levers **22**A and **22**B are provided so as to correspond respectively to the left and right engines **3**A and **3**B. The rotation speed of the engine **3**A is changed by operating the accelerator lever **22**A, and the rotation speed of the engine **3**B is changed by operating the accelerator lever **22**B.

The operation wheel **23** as the operation means is a device determining the traveling direction of the ship, and is provided near the operator's seat of the hull **2**. The traveling direction is changed widely following increase of a rotation amount of the operation wheel **23**.

A correction control start switch **42** (see FIG. **5**) is a switch for starting correction control of turning action of the hull **2**.

The correction control start switch **42** is provided near the joystick **21** and is connected to the control device **31**.

Next, an explanation will be given on various kinds of detection means referring to FIG. **5**.

Rotation speed detection sensors **35**A and **35**B as rotation speed detection means are means for detecting engine rotation speeds N_A and N_B of the engines **3**A and **3**B and are provided in the engines **3**A and **3**B.

An elevation angle sensor **36** as an elevation angle detection means is a means for detecting an elevation angle a of the hull **2**. The elevation angle indicates inclination of the hull in the water concerning a flow.

A hull speed sensor **37** as a hull speed detection means is a means for detecting a hull speed V, and is an electromagnetic log, a Doppler sonar or a GPS for example.

Lateral rotation angle detection sensors **38**A and **38**B as lateral rotation angle detection means are means for detecting lateral rotation angles θ_A and θ_B of the outdrive devices **10**A and **10**B. The lateral rotation angle detection sensors **38**A and **38**B are provided near the hydraulic steering actuators **17**A and **17**B, and detect the lateral rotation angles θ_A and θ_B of the outdrive devices **10**A and **10**B based on the drive amounts of the hydraulic steering actuators **17**A and **17**B.

The operation amount detection sensor **39** as the operation amount detection means is a sensor for detecting the operation amount in the plane operation surface and the operation amount in the torsion operation surface of the joystick **21**. The operation amount detection sensor **39** detects an inclination angle and an inclination direction of the joystick **21**. The operation amount detection sensor **39** detects the torsion amount of the joystick **21**.

The operation amount detection sensors **43**A and **43**B as the operation amount detection means are sensors for detecting the operation amounts of the accelerator levers **22**A and **22**B. The operation amount detection sensors **43**A and **43**B detect inclination angles of the accelerator levers **22**A and **22**B.

The operation amount detection sensor **44** as the operation amount detection means is a sensor for detecting the operation amount of the operation wheel **23**. The operation amount detection sensor **44** detects the rotation amount of the operation wheel **23**.

Outdrive device rotation speed detection sensors **40**A and **40**B as rotation speed detection means of the outdrive devices **10**A and **10**B are sensors for detecting rotation speeds of the screw propellers **15**A and **15**B of the outdrive devices **10**A and **10**B, and are provided at middle portions of the final output shaft **14**A and **14**B. The outdrive device rotation speed detection sensors **40**A and **40**B detect outdrive device rotation speeds ND_A and ND_B.

The control device **31** controls the rotation speed changing actuators **4**A and **4**B, the forward/reverse switching clutches **16**A and **16**B and the hydraulic steering actuators **17**A and **17**B so that the ship travels to the direction set by the joystick **21**. The control device **31** is connected respectively to the

rotation speed changing actuators **4**A and **4**B, the forward/reverse switching clutches **16**A and **16**B, the hydraulic steering actuators **17**A and **17**B, the electromagnetic valves **17**Aa and **17**Ba, the joystick **21**, the accelerator levers **22**A and **22**B, the operation wheel **23**, the rotation speed detection sensors **35**A and **35**B, the elevation angle sensor **36**, the hull speed sensor **37**, the lateral rotation angle detection sensors **38**A and **38**B, the operation amount detection sensor **39**, the operation amount detection sensors **43**A and **43**B, the operation amount detection sensor **44**, and the outdrive device rotation speed detection sensors **40**A and **40**B. The control device **31** includes a calculation means **32** having a CPU (central processing unit) and a storage means **33** such as a ROM, a RAM or a HDD.

Next, an explanation will be given on a method for calculating the propulsion powers and directions of the left and right outdrive devices **10**A and **10**B with the control device **31** referring to FIG. **6**.

Firstly, an operation amount of the joystick **21** is detected (step S**10**), and based on the operation amount of the joystick **21**, oblique sailing component propulsion power vectors T_{Atrans} and T_{Btrans} for the oblique sailing and turning component propulsion power vectors T_{Arot} and T_{Brot} for the turning of the left and right outdrive devices **10**A and **10**B are calculated respectively (step S**20**).

The operation amount of the joystick **21** is the inclination angle, the inclination direction and a torsion amount of the joystick **21**, and detected with the operation amount detection sensor **39**. Then, based on the operation amounts, the control device **31** calculates the oblique sailing component propulsion power vectors T_{Atrans} and T_{Btrans} for the oblique sailing and the turning component propulsion power vectors T_{Arot} and T_{Brot} for the turning of the left and right outdrive devices **10**A and **10**B. The oblique sailing component propulsion power vectors T_{Atrans} and T_{Btrans} of the left and right outdrive devices **10**A and **10**B are calculated as shown in FIG. **7**(A). The turning component propulsion power vectors T_{Arot} and T_{Brot} of the left and right outdrive devices **10**A and **10**B are calculated as shown in FIG. **7**(B).

Next, the oblique sailing component propulsion power vectors T_{Atrans} and T_{Btrans} and the turning component propulsion power vectors T_{Arot} and T_{Brot} of the left and right outdrive devices **10**A and **10**B are composed respectively so as to calculate the propulsion powers and the directions of the left and right outdrive devices **10**A and **10**B (step S**30**).

As shown in FIG. **7**(C), vectors T_A and T_B are calculated by composing the oblique sailing component propulsion power vectors T_{Atrans} and T_{Btrans} and the turning component propulsion power vectors T_{Arot} and T_{Brot} of the left and right outdrive devices **10**A and **10**B calculated at the step S**20**.

Next, based on norms of the composited vectors T_A and T_B, the control device **31** calculates a rotation speed N of each of the left and right engines **3**A and **3**B (step S**40**), the forward/reverse switching clutches **16**A and **16**B are switched, and the left and right engines **3**A and **3**B are driven. Based on the directions of the composited vectors T_A and T_B, the lateral rotation angles θ_A and θ_B of the outdrive devices **10**A and **10**B are calculated respectively (step S**50**), and the hydraulic steering actuators **17**A and **17**B are driven.

Next, an explanation will be given on a process of restriction of the lateral rotation angles of the pair of left and right outdrive devices **10**A and **10**B at the calculation of the rotation angles θ_A and θ_B at the step S**50**. Since the same process is performed concerning the pair of left and right outdrive devices **10**A and **10**B, the process of restriction of the lateral rotation angle of the one outdrive device **10**A is described.

When the angle (direction) β of the composition vectors T_A is over a predetermined angle range of the outdrive device **10**A at the step S**50** in the flow chart, the outdrive device **10**A is controlled so as to be at a predetermined limiting angle mode.

Herein, the predetermined angle range is a range shown with slashes in FIG. **8**, and is an angle range in which the outdrive device **10**A can be rotated. Since the hydraulic steering actuator **17**A is constructed by a hydraulic cylinder and its rotation range is limited, the predetermined angle range is provided. When the predetermined angle range is referred to as θ_1, a limiting angle is referred to as α, and the rear side is regarded as 0°, the relation thereof is $-\alpha<\theta_1\leq\alpha$. Since the rotation of the engine **3**A can be switched between forward and reverse rotations with the forward/reverse switching clutch **16**A, centering on the front side, in other words,) 180° (−180°), the lateral angle is $-180°<\theta_1\leq 180°-(-\alpha)$, $180°-\alpha<\theta_1\leq 180°$. For example, when α is 30°, the predetermined angle range is $-180°<\theta_1\leq -150°$, $-30°<\theta_1\leq 30°$, $150°<\theta_1\leq 180°$.

Next, an explanation will be given on the limiting angle mode.

In the limiting angle mode, for obtaining smooth action following the operation of the joystick **21**, the driving is performed with reduced propulsion power. Namely, the engine rotation speed N_A is reduced to a set rotation speed N_{set}. In the limiting angle mode, the rotation angle θ_A of the outdrive device **10**A is fixed at a state of a predetermined limiting angle. Concretely, by the angle (direction) β of the composition vectors T_A determined with the control device **31**, the lateral rotation angle θ_A of the outdrive device **10**A is determined. As shown in FIG. **9**, in the case in which an X axis indicates the angle β of the composition vector T_A and a Y axis indicates the lateral rotation angle θ_A of the outdrive device **10**A, when the angle β of the composition vector T_A is within a range of $-180°-(-\alpha)<\beta\leq -90°$, the lateral rotation angle θ_A of the outdrive device **10**A is $-180°-(-\alpha)$. When the angle β of the composition vector T_A is within a range of $-90°<\beta\leq-\alpha$, the lateral rotation angle θ_A of the outdrive device **10**A is $(-\alpha)$. When the angle β of the composition vector T_A is within a range of $\alpha<\beta\leq 90°$, the lateral rotation angle θ_A of the outdrive device **10**A is α. When the angle β of the composition vector T_A is within a range of $90°<\beta\leq 180°-\alpha$, the lateral rotation angle θ_A of the outdrive device **10**A is $180°-\alpha$.

As shown in FIG. **9**, in the limiting angle mode, a play tolerance (hysteresis) is set so as to prevent frequent change of the rotation angle θ_A of the outdrive device **10**A.

In the case in which the angle β of the composition vector T_A is within a range of $-180°-(-\alpha)<\beta\leq -90°$, when the angle β of the composition vector T_A is larger than $-90°+\gamma$, the rotation angle θ_A of the outdrive device **10**A is $(-\alpha)$. In the case in which the angle β of the composition vector T_A is within a range of $-90°<\beta\leq-\alpha$, when the angle β of the composition vector T_A is not more than $-90°-\gamma$, the rotation angle θ_A of the outdrive device **10**A is $-180°-(-\alpha)$.

In the case in which the angle β of the composition vector T_A is within a range of $\alpha<\beta\leq 90°$, when the angle β of the composition vector T_A is larger than $90°+\gamma$, the rotation angle θ_A of the outdrive device **10**A is $180°-\alpha$. In the case in which the angle β of the composition vector T_A is within a range of $90°<\beta\leq 180°-\alpha$, when the direction of the composition vector T_A is not more than $90°-\gamma$, the rotation angle θ_A of the outdrive device **10**A is α.

In the limiting angle mode, the engine rotation speed N_A of the engine **3**A may alternatively be reduced following reduction of a minor angle between the direction of the composition vector T_A and the lateral direction of the hull **2**. Following the

reduction of the angle between the direction of the composition vector T_A and the lateral direction of the hull (90° and −90°), that is, following approach of the angle β of the composition vector T_A to 90° or −90°, the engine rotation speed N_A of the engine **3**A is reduced.

As shown in FIGS. **10** and **11**, in the limiting angle mode, by increasing a rotation reduction rate of the engine **3**A, the engine rotation speed N_A is reduced.

An area shown with slashes in FIG. **10** is a rotation speed reduction area in which the engine rotation speed N_A is reduced gradually, and a colored area is a reduction rate 100% area in which the reduction rate of the engine rotation speed N_A is 100%.

Concretely, as shown in FIG. **11**, within a range larger than −180°−(−α) and not more than Φ**1**, the reduction rate is increased following the increase of the angle β of the composition vector T_A, and at Φ**1**, the reduction rate is 100%, that is, the engine rotation speed N_A is a low idling rotation speed.

When the angle β of the composition vector T_A is larger than Φ**1** and not more than Φ**2**, the reduction rate is maintained at 100%.

When the angle β of the composition vector T_A is larger than Φ**2** and not more than −α, the reduction rate is reduced following the increase of the angle β. At −α, the reduction rate is 0%, that is, the engine rotation speed N_A is the engine rotation speed calculated at the step S**40**.

Herein, Φ**1** and Φ**2** are angles are linearly symmetrical with −90°. For example, when Φ**1** is −100°, Φ**2** is −80°.

When the angle β of the composition vector T_A is larger than α and not more than Φ**3**, the reduction rate is increased following the increase of the angle β. At Φ**3**, the reduction rate is 100%, that is, the engine rotation speed N_A is the low idling rotation speed.

When the angle β of the composition vector T_A is larger than Φ**3** and not more than Φ**4**, the reduction rate is maintained at 100%.

When the angle β of the composition vector T_A is larger than Φ**4** and not more than 180°−α, the reduction rate is reduced following the increase of the angle β. At 180°−α, the reduction rate is 0%, that is, the engine rotation speed N_A is the engine rotation speed calculated at the step S**40**.

Herein, Φ**3** and Φ**4** are angles are linearly symmetrical with 90°. For example, when Φ**3** is 80°, Φ**4** is 100°.

Φ**1**, Φ**2**, Φ**3** and Φ**4** can be changed within the ranges of $-180°-(-\alpha)\leq\Phi 1<-90°$, $-90°\leq\Phi 2<-\alpha$, $\alpha\leq\Phi 3<90°$, and $90°\leq\Phi 4<180°-\alpha$.

As mentioned above, the ship maneuvering device **1** has the pair of left and right engines **3**A and **3**B, the rotation speed changing actuators **4**A and **4**B independently changing engine rotation speeds N of the pair of left and right engines **3**A and **3**B, the pair of left and right outdrive devices **10**A and **10**B respectively connected to the pair of left and right engines **3**A and **3**B and rotating the screw propellers **15**A and **15**B so as to propel the hull **2**, the forward/reverse switching clutches **16**A and **16**B disposed between the engines **3**A and **3**B and the screw propellers **15**A and **15**B, the pair of left and right hydraulic steering actuators **17**A and **17**B respectively independently rotating the pair of left and right outdrive devices **10**A and **10**B laterally, the joystick **21** setting the traveling direction of the ship, the operation amount detection sensor **39** detecting the operation amount of the joystick **21**, and the control device **31** controlling the rotation speed changing actuators **4**A and **4**B, the forward/reverse switching clutches **16**A and **16**B, and the hydraulic steering actuators **17**A and **17**B so as to travel to a direction set by the joystick **21**. From the operation amount of the joystick **21**, the control device **31** calculates the oblique sailing component propulsion power vectors T_{Atrans} and T_{Btrans} for the oblique sailing of the left and right outdrive devices **10**A and **10**B and the turning component propulsion power vectors T_{Arot} and T_{Brot} for the turning, and composes the oblique sailing component propulsion power vectors T_{Atrans} and T_{Btrans} and the turning component propulsion power vectors T_{Arot} and T_{Brot} of the left and right outdrive devices **10**A and **10**B so as to calculates the composition vectors T_A and T_B, thereby calculating the propulsion powers and the directions of the left and right outdrive devices **10**A and **10**B.

According to the construction, in comparison with the case of calculating the propulsion powers and the directions of the left and right outdrive devices **10**A and **10**B based on only the oblique sailing component propulsion power vectors T_{Atrans} and T_{Btrans} and subsequently calculating the propulsion powers and the directions of the left and right outdrive devices **10**A and **10**B based on only the turning component propulsion power vectors T_{Arot} and T_{Brot}, by calculating the composition vectors T_A and T_B based on the oblique sailing component propulsion power vectors T_{Atrans} and T_{Btrans} and the turning component propulsion power vectors T_{Arot} and T_{Brot}, the final propulsion powers and the final directions can be calculated, whereby smooth operation is obtained without setting priority and operability is improved.

When the angle β of the composition vector T_A (T_B) is over the predetermined angle range of the outdrive devices **10**A and **10**B, the outdrive devices **10**A and **10**B are controlled so as to be made the predetermined limiting angle mode and the engine rotation speed N_A (N_B) is reduced to the set rotation speed N_{set}.

According to the construction, even if the angle β of the composition vector T_A (T_B) is over the predetermined angle range of the outdrive device **10**A (**10**B), the steering of the outdrive devices **10**A (**10**B) can be corrected.

When the angle β of the composition vector T_A (T_B) is over the predetermined angle range of the outdrive device **10**A (**10**B), the rotation angle θ_A (θ_B) of the outdrive device **10**A (**10**B) is fixed at the state of the predetermined limiting angle.

According to the construction, when the angle of the composition vector T_A (T_B) is over the predetermined angle range of the outdrive devices **10**A (**10**B), frequent change of the rotation angle and frequent switching of forward/reverse rotation of the outdrive device **10**A (**10**B) is prevented.

When the angle β of the composition vector T_A (T_B) is over the predetermined angle range of the outdrive device **10**A (**10**B), the engine rotation speed N_A (N_B) of the engine **3**A (**3**B) is reduced following the reduction of the minor angle between the direction β of the composition vector T_A (T_B) and the lateral direction of the hull.

According to the construction, when the angle β of the composition vector T_A (T_B) is over the predetermined angle range of the outdrive devices **10**A (**10**B), the switching of forward/reverse rotation of the outdrive devices **10**A (**10**B) can be performed smoothly.

INDUSTRIAL APPLICABILITY

The present invention can be used for a ship having an inboard motor in which a pair of left and right engines are arranged inside a hull and power is transmitted to a pair of left and right outdrive devices arranged outside the hull.

The invention claimed is:

1. A ship maneuvering device comprising:

a pair of left and right engines;

rotation speed changing actuators independently changing engine rotation speeds of the pair of left and right engines;

a pair of left and right outdrive devices respectively connected to the pair of left and right engines and rotating screw propellers so as to propel a hull;

forward/reverse switching clutches disposed between the engines and the screw propellers;

a pair of left and right steering actuators respectively independently rotating the pair of left and right outdrive devices laterally within a predetermined angle range;

an operation device setting a traveling direction of a ship;

an operation amount detection device detecting the operation amount of the operation device; and

a control device controlling the rotation speed changing actuators, the forward/reverse switching clutches, and the steering actuators so as to travel to a direction set by the operation device,

wherein the control device calculates oblique sailing component propulsion power vectors for oblique sailing of the left and right outdrive devices and turning component propulsion power vectors for the turning from the operation amount of the operation device, and composes the oblique sailing component propulsion power vectors and the turning component propulsion power vectors of the left and right outdrive devices so as to calculate composition vectors, thereby calculating propulsion powers and directions of the left and right outdrive devices,

wherein when the direction of the composition vector is over a predetermined angle range of the outdrive device, the outdrive device is controlled so as to be made a predetermined limiting angle mode and the engine rotation speed is reduced to a set rotation speed.

2. A ship maneuvering device comprising:

a pair of left and right engines;

rotation speed changing actuators independently changing rotation speeds of the pair of left and right engines;

a pair of left and right outdrive devices respectively connected to the pair of left and right engines and rotating screw propellers so as to propel a hull;

forward/reverse switching clutches disposed between the engines and the screw propellers;

a pair of left and right steering, actuators respective independently rotating pair of left and right outdrive devices laterally within a predetermined angle range;

an operation device setting a traveling direction of a ship;

an operation amount detection device detecting the operation amount of the operation device; and

a control device controlling the rotation speed changing actuators, the, forward/reverse switching clutches, and the steering actuators so as to travel to a direction set by the operation device,

wherein the control device calculates oblique sailing component propulsion power vectors for oblique sailing of the left and right outdrive devices and turning component propulsion power vectors for the turning from the operation amount of the operation device, and, composes the oblique sailing component propulsion power vectors and the turning component propulsion power vectors of the left and right outdrive devices so as to calculate composition vectors, thereby calculating propulsion powers and directions of the left and right outdrive devices,

wherein when the direction of the composition vector is over a predetermined angle range of the outdrive device, a rotation angle of the outdrive device is fixed at a state of a predetermined limiting angle.

3. A ship maneuvering device comprising:

a pair of left and right engines;

rotation speed changing actuators independently changing engine rotation speeds of the pair of left and right engines;

a pair of left and right outdrive devices respectively connected to the pair of left and right engines and rotating screw propellers so as to propel a hull;

forward/reverse switching clutches disposed between the engines and the screw propellers;

a pair of left and right steering actuators respectively independently rotating the pair of left and right outdrive devices laterally within a predetermined angle range;

an operation device setting a traveling direction of a ship;

an operation amount detection device detecting the operation amount of the operation device; and

a control device controlling the rotation speed changing actuators, the forward/reverse switching clutches, and the steering actuators so as to travel to a direction set by the operation device,

wherein the control device calculates oblique sailing component propulsion power vectors for oblique sailing of the left and right outdrive devices and turning component propulsion power vectors for the turning from the operation amount of the operation device, and composes the oblique sailing component propulsion power vectors and the turning component propulsion power vectors of the left and right outdrive devices so as to calculate composition vectors, thereby calculating propulsion powers and directions of the left and right outdrive devices,

wherein when the direction of the composition vector is over a predetermined angle range of the outdrive device, the engine rotation speed of the engine is reduced following reduction of a minor angle between the direction of the composition vector and a lateral direction of the hull.

4. A ship maneuvering device comprising:

a pair of left and right engines;

rotation speed changing actuators independently changing rotation seeds of the pair of left and right engines;

a pair of left and right outdrive devices respectively connected to the pair of left and right engines and rotating screw propellers so as to propel a hull;

forward/reverse, switching clutches disposed between the engines and the screw propellers;

pair of left and right steering actuators respectively independently rotating the pair of left and right outdrive devices laterally within a predetermined angle range;

an operation device setting a traveling direction of a ship;

an operation amount detection device detecting the operation amount of the operation device; and

a control device controlling the rotation speed changing actuators, the forward/reverse switching clutches, and the steering actuators so as to travel to a direction set by the operation device,

wherein the control device calculates oblique sailing component propulsion power vectors for oblique sailing of the left and right outdrive devices and turning component propulsion power vectors for the turning from the operation amount of the operation device, and composes the oblique sailing component propulsion power vectors and tie turning component propulsion power vectors of the left and right outdrive devices so as to calculate composition vectors, thereby calculating propulsion powers and directions of the left and right outdrive devices,

wherein when the direction of the composition vector is over a predetermined angle range of the outdrive device, the outdrive device is controlled so as to be made a predetermined limiting angle mode and the engine rotation speed is reduced to a set rotation speed and a rotation angle of the outdrive device is fixed at a state of a predetermined limiting angle.

* * * * *